EN

Electronic Roller Shutter Belt Winder superrollo GW60

Translation of the Original Operating and Assembly Manual

Item no. SR10060 / SR10065

Surface mounting

Flush mounting

BA10060-2 (03.16)

Dear Customer,

With your purchase of a roller shutter belt winder superrollo GW60, you have chosen a quality product manufactured by superrollo. Thank you for the trust you have placed in us.

These instructions...

...describe how to install, connect the electrical system and operate your roller shutter belt drive superrollo GW60.

Application of this manual

- Before you begin, please read this manual through completely and follow all the safety instructions.
- This manual is a component of the product. Please store it in an easily accessible place.
- When passing the superrollo GW60 on to a third party, this manual must be passed on as well.
- Damage resulting from non-compliance with these instructions and safety instructions will void the guarantee. We shall assume no liability for any consequential damage.

1. General view

Flush-mounted model

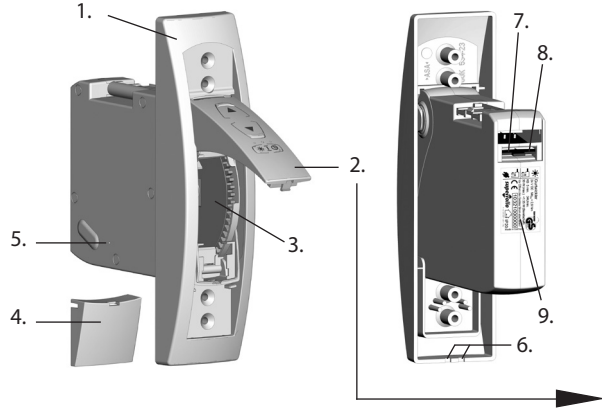

1. Mounting frame
2. Operating panel
3. Reel compartment
4. Screw cover
5. Disengaging bracket
6. Cable bushings
7. Power supply connection
8. Sun sensor connection
9. Type plate (incl. manufacturer details)

Key
(see page 5)

Surface-mounted model

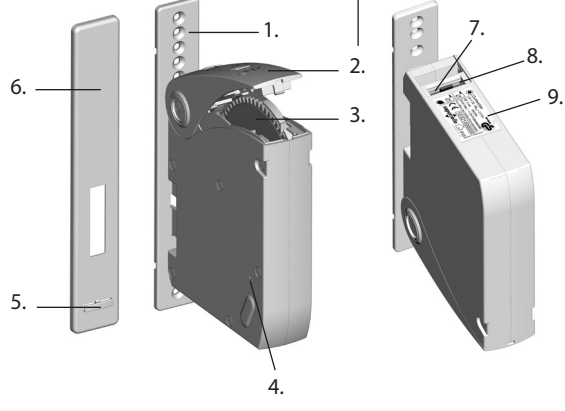

1. Wall bracket
2. Operating panel
3. Reel compartment
4. Disengaging bracket
5. Cable bracket
6. Wall bracket front panel
7. Power supply connection
8. Sun sensor connection
9. Type plate (incl. manufacturer details)

Flush- and surface-mounted model

10. Belt insertion guide
11. Up button
12. Down button
13. Sun button with indicator light
14. Timer button with indicator light
15. SET button

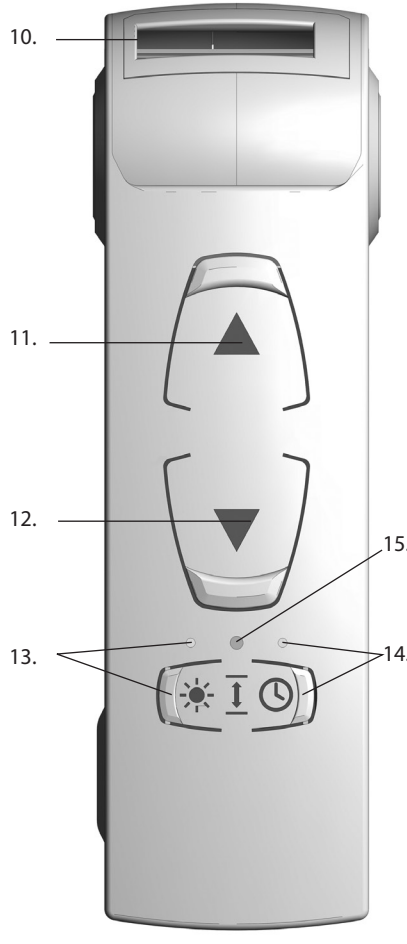

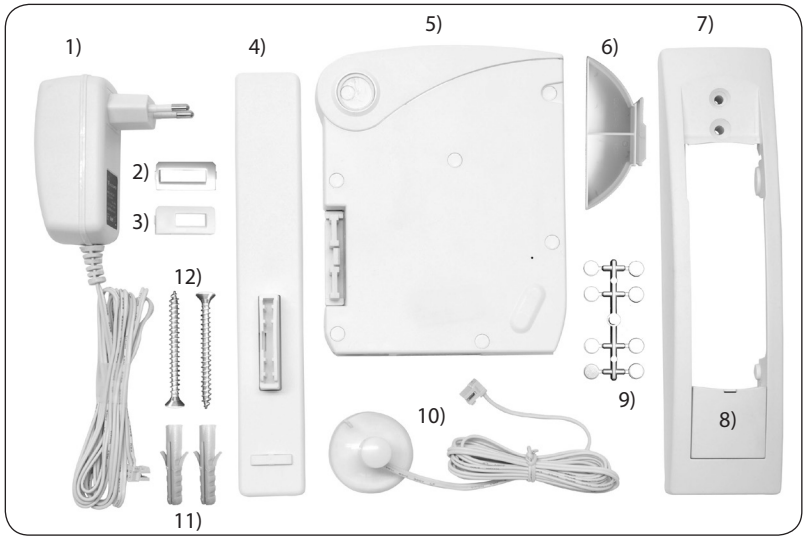

Included in delivery

1. Mains adapter 230 V/50 Hz / 24 V (DC)
2. Belt inlet 23 mm
3. Belt inlet 15 mm
4. Wall bracket for surface mounting, incl. front panel (not to be used for flush mounting)
5. Universal belt winder GW60
6. Belt adapter for mini belt 15 mm
7. Mounting frame for flush mounting (not to be used for surface-mounting)
8. Screw cover
9. Screw caps for the housing screws
10. Sun sensor
11. Wall plugs
12. Mounting screws

After unpacking please check and compare...

the contents of the package with the above specified.

Check the details on the type plate

Check that the voltage / frequency on the type plate corresponds to the local mains conditions.

3. Explanation of the safety symbols used

Danger of fatal electric shock

This symbol warns of danger related to electric current.
It requires that safety precautions be taken to protect life.

Important safety information

This concerns your safety.
Please observe all instructions marked with this symbol.

NOTE

In this way, we wish to make you aware of the following content in order to ensure optimal functionality.

Symbols and depictions used

Depiction / Description

1. Steps to be taken

◆ Itemisation

1. List

The use of defective equipment can lead to personal injury and damage to property (electric shocks, short circuiting).

- Never use defective or damaged equipment.
- Check the superrollo GW60 and the provided mains adapter beforehand for damage.
- Should you discover damage to the equipment, please consult our customer service department, see page 56.

Incorrect use leads to an increased risk of injury.

- Train all personnel to use the superrollo GW60 safely.
- This device may be used by children from 8 years of age upwards as well as by persons with reduced physical, sensory or mental capacities or with lack of experience and knowledge if they are supervised or have been instructed on how to use the device safely and if they understand what dangers may result from this.
- Children must not play with the device.
- Cleaning and user maintenance may not be carried out by children without supervision.
- Watch the moving roller shutters whilst carrying out the settings and during normal operation, and keep other people away from the area to avoid injury in the event the shutters suddenly slip.
- Carry out all cleaning work on the roller shutters whilst the device is disconnected from the mains power.

The mains socket and mains adapter must be easily accessible at all times.

Exceeding the maximum permissible running time (KB) may overload and damage the superrollo GW60.

- The maximum permissible running time for a cycle may not be exceeded when the equipment is in operation. For this reason, the superrollo GW60 has an automatic running time limit (KB) of five minutes.
- If the running time limit is triggered, then the superrollo GW60 must be left for at least 30 minutes to cool down. Full operational availability is re-established after approx. one hour.

According to EN 13659, it is necessary to determine that the movement conditions for the shutters are maintained in accordance with EN 12045.

- The displacement must be of at least 40 mm on the lower edge in the rolled-out position with a force of 150 N in the upwards direction.
- In doing so, it must be ensured that the extending speed of the shutters for the final 0.4 m is less than 0.15 m/s.

Sudden movement of the belt winder may lead to risk of injury.

- Only carry out the installation of the belt winder in an isolated, zero-volts state.
- Remove the power supply from the mains socket before carrying out any maintenance, cleaning or repair work.

4.1 Intended use

Only use the electronic roller shutter belt for opening and closing flat roller shutters with a permissible belt.

IMPORTANT
Mechanical locks of any kind are not suitable for automated operation with this device.

Only use the manufacturer's original spare parts.

- By doing so, you avoid risk of malfunctions and damage to your superrollo GW60.
- Only use the original mains adapter (type YS35-29240)
- As the manufacturer, we provide no guarantee for the use of third-party components and accept no liability for consequential damage resulting from such.
- All repairs to the superrollo GW60 must be undertaken by authorised customer service personnel.

Operating conditions

- Only operate the superrollo GW60 in dry rooms.
- An easily accessible 230 V/50 Hz mains socket must be available at the installation site.
- The roller shutters must run up and down smoothly. It should not jam.
- The mounting surface for the superrollo GW60 must be flat.

The superrollo GW60 may be damaged if excessively long belts are used.

- Only use belts of the permissible lengths.

4.1 Intended use

Permissible belts

Belt width	Belt thickness	Belt length
15 mm (Mini belt)	1.0 mm	5.5 m
23 mm (Standard belt)	1.0 mm	5.5 m
	1.3 mm	4.5 m

Permissible shutter surface area

- Light plastic roller shutters up to 8 m^2.
- Different values apply to aluminium and wooden roller shutters.

The specifications are intended for guidance only and apply to an ideal installation situation.

The actual values may vary due to local conditions.

4.2 Improper use

Using the superrollo GW60 for any other purpose than previously mentioned is not permissible.

There is a risk to life caused through short circuiting and electric shocks if the superrollo GW60 is used outside.

- Never install or operate the superrollo GW60 outside.

5. Functional description

The superrollo GW60 is an electric roller shutter belt winder designed for use inside. With its variable installation options, it can either be used as a surface-mounted device or as a flush-mounted device. The power supply is provided via the enclosed mains adapter.

Features and control options:

- Manual operation (MANU)
- Automatic mode (AUTO), with a separate switching time for UP (▲) and DOWN (▼)
- AUTO/MANU - switchover
- Automatic solar function (dimming when there is sunlight by means of the sun sensor)

5.1 Description of the safety functions

Obstacle detection

The movement of the belt is monitored. If the roller shutters hit an obstacle in the DOWN (▼) direction, the belt will stop moving and the belt winder is switched off.

Once the system has switched off, it is no longer possible to directly operate the drive in the same direction.

- Run the belt winder back in the opposite direction and remove any possible obstacle.
- Then it is possible to operate the drive in the original direction again.

There is a risk of injury if the obstacle detection is not working.

- The belt must be wound on as evenly as possible to ensure safe and correct functioning of the obstacle detection function.
- Please ensure that the belt winds as straight and evenly as possible into the device during its subsequent cycle after the obstacle detection system has triggered.

Overload cut-off

The belt winder is equipped with an overload cut-off system.

If the drive jams in the UP (▲) cycle (for example, due to ice), the belt winder will also switch off.

- First, remove the cause of the overload.
- Then the superrollo GW60 is fully operational again in both directions.

6. Safety instructions for the installation

Poor routing of the belt can cause the belt to fail and leads to unnecessary loads on the belt winder.

- Install the belt winder so that the belt runs as straight as possible into the device, in order to avoid unnecessary friction and wear.

Incorrect installation can lead to property damage.

- Strong forces are exerted during operation of the system which require secure installation on a firm base.

6.1 You will require the following tools

- Screwdriver
- Scissors
- Carpenter's gauge or measuring tape
- Pen
- Optionally, a drilling machine and a 6 mm masonry drill if the provided hole pattern does not fit or if the belt winder has to be reinstalled.

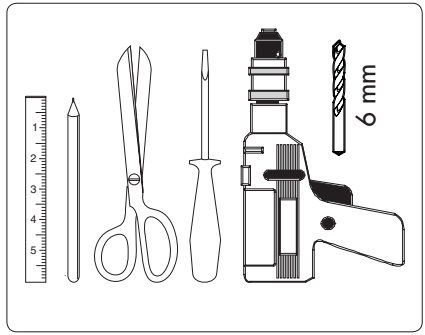

1. **Remove the old belt winder, if you are carrying out a conversion to an existing roller shutter system.**

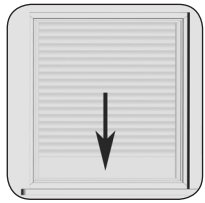

- Let the roller shutter move down fully, until the slats are completely closed.
- Remove the old belt winder and unreel the belt.

There is a risk of injury from the pre-tensioned springs on the old belt winder.

- The spring unit can suddenly recoil when it is removed.
- Hold the spring unit firmly when loosening the belt and allow it to recoil slowly until the spring unit has completely unwound.

2. **Prepare the belt.**

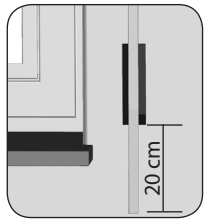

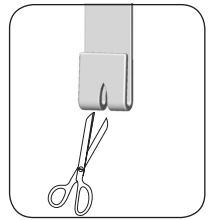

- Cut the belt off approx. 20 cm under the belt box.
- Fold the end of the belt over by approx. 2 cm and cut a short slit in the centre. This enables you to subsequently hook the belt onto the reel.

3. Insert the required belt inlet.

This will ensure the correct functioning of the respective belt.

IMPORTANT
The belt inlet must be installed before the mounting frame.

Belt inlet for:

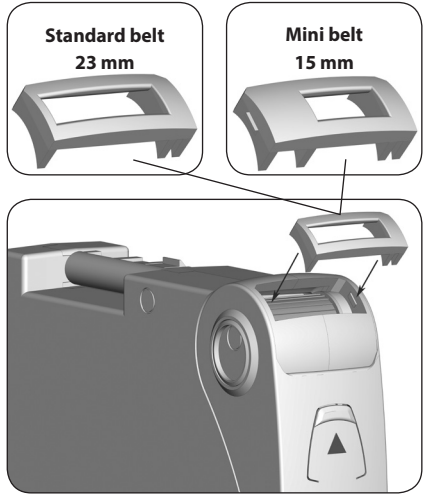

4. Attach the mounting frame and click into place.

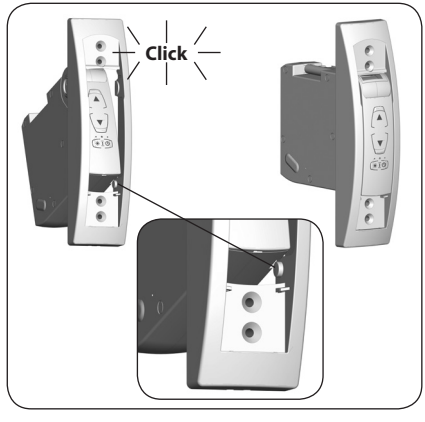

5. Use the provided mounting holes.

Two mounting holes are required to fasten the belt winder. Generally, it is possible to make use of the existing installation holes to screw the belt winder in place.

If this is not the case, push the belt winder into the belt box and draw on the required mounting holes; otherwise continue with point 7.

NOTE
Pay attention to the hole spacing for the flush-mounted device.

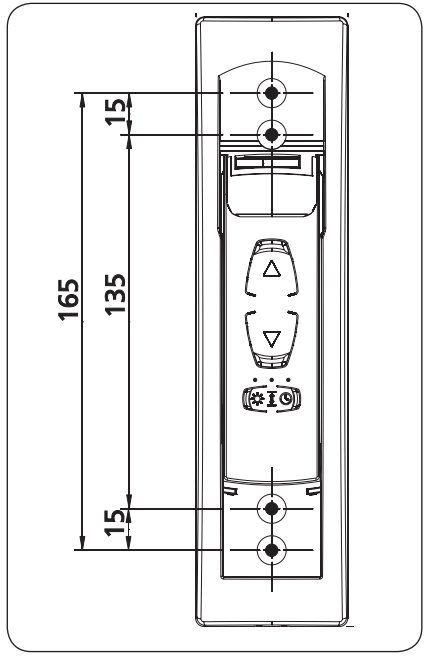

6. Mounting holes (if required).

Then, pull the belt winder out of the belt box and drill the mounting holes with a 6 mm masonry drill bit. Subsequently place the provided mounting plugs into the holes drilled.

7. Connect the mains adapter and the sun sensor.

Now, connect the mains adapter and, if desired, the sun sensor on the back of the belt winder.

CAUTION

Connecting the plugs in the wrong way may destroy the belt winder.

- Plug both plugs true to side into the opening. Observe the connection symbols on the type plate.
- Never insert the plugs onto the PCB with force.

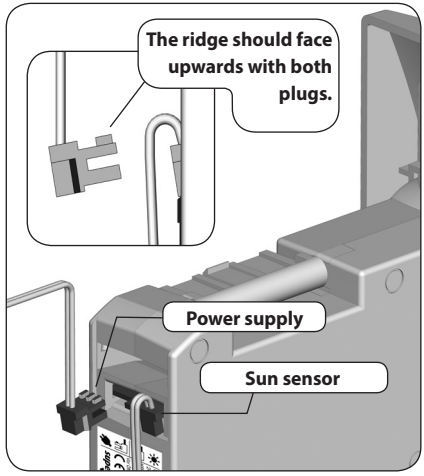

8. Lay the connecting cable safely.

Lay the connecting cables, as shown in the picture, on the back of the device and feed both cables through the grooving in the mounting frame.

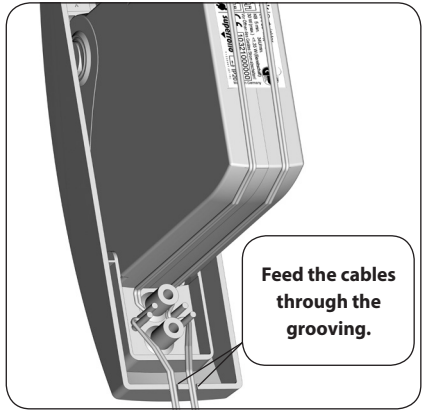

IMPORTANT
Comply with the traction relief. It is imperative that both connecting cables are laid with traction relief so that they can no longer be pulled out of the device after installation.

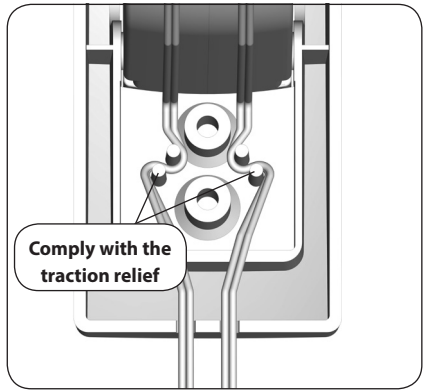

Damaged cables may lead to malfunctions.

- Pay attention that cables are laid safely. The connecting cables may not be pinched when screwing on the belt winder or damaged by the assembly screws.

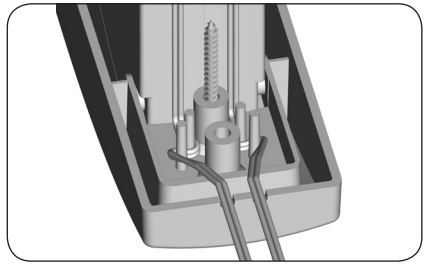

9. Screw the belt winder tightly.

Slide the belt winder into the belt box and screw it tight using the assembly screws provided.

IMPORTANT
Pay attention to connecting cables. Feed both connecting cables through the grooving of the mounting frame on the bottom side of the belt winder, as described on page 18.

10. Open the operating panel.

The operating panel can be opened by pressing lightly and levering open with a flat screwdriver.

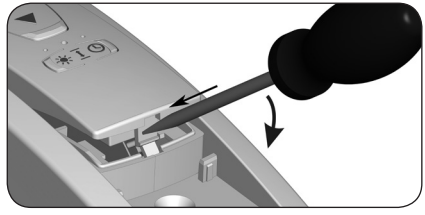

11. Feed in the belt.

Draw-in the belt into the belt winder from the top.

12. Pull the belt over the fastening hook.

Continue to feed the belt into the device as shown in the bottom sectional diagram and subsequently slide the belt over the fastening hook from below.

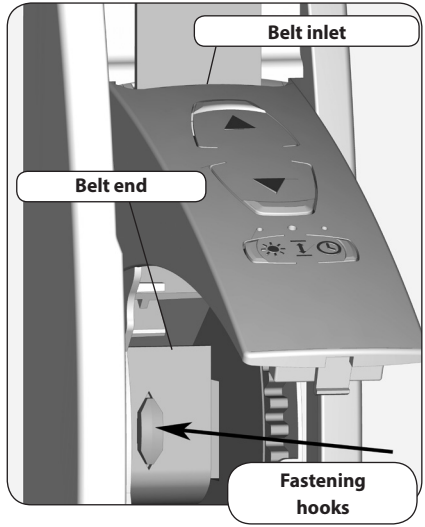

Belt path when flush-mounted.

This sectional diagram shows the belt path within the belt winder.

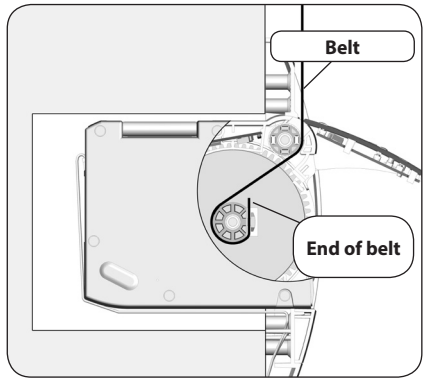

NOTE
If the fastening hook is not accessible, plug the mains adapter into the mains socket and drive the hook into the right position with the control buttons. **Subsequently pull the mains adapter out of the socket again.**

13. Optionally, mount the belt adapter.

Only required with mini belt (15 mm width), otherwise continue with point 14. For an optimum belt guide to be achieved for mini belts, the provided belt adapter must be pushed into the reel compartment after feeding in the belt.

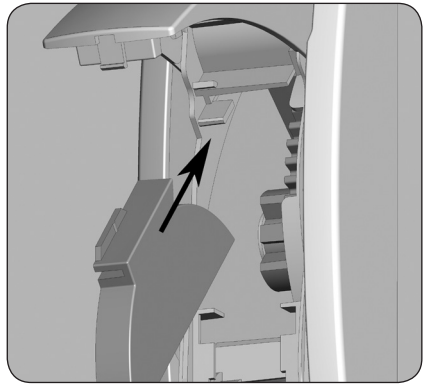

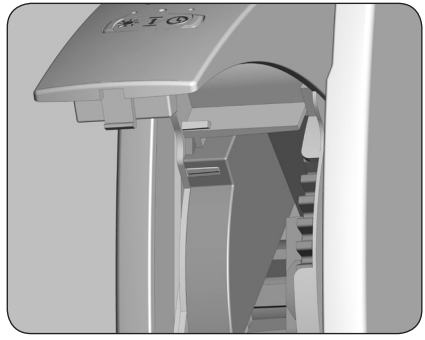

14. Attach the screw cover.

Press the bottom screw cover into the mounting frame and close the reel compartment by pressing the operating panel closed.

15. Mounting the sun sensor.

Secure the sun sensor to the window pane using the suction cup. The position of the sun sensor on the window pane determines the point at which the roller shutters will close to in the event of sunlight.

16. Commissioning.

Plug in the mains adapter into the 230 V / 50 Hz mains socket. This completes the installation process.

IMPORTANT
The mains socket and mains adapter must be easily accessible at all times.

17. Continue with the settings in chapter 9, see page 32.

1. **Remove the old belt winder, if you are carrying out a conversion to an existing roller shutter system.**

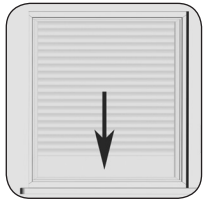

- Let the roller shutter move down fully, until the slats are completely closed.
- Remove the old belt winder and unreel the belt.

There is a risk of injury from the pre-tensioned springs on the old belt winder.

- The spring unit can suddenly recoil when it is removed.
- Hold the spring unit firmly when loosening the belt and allow it to recoil slowly until the spring unit has completely unwound.

2. **Prepare the belt.**

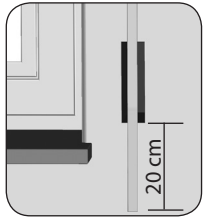

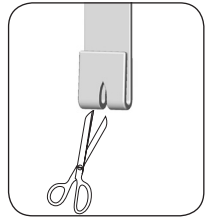

- Cut the belt off approx. 20 cm under the belt box.
- Fold the end of the belt over by approx. 2 cm and cut a short slit in the centre. This enables you to subsequently hook the belt onto the reel.

Mounting on window frames, etc.

Weak window frames may break

- When mounting on window frames, please check their structure and load capacity. Especially when mounting onto designs made of synthetic materials, the fastening screws must be screwed tight and must not loosen during operation.
- If required, ask your window manufacturer before fastening the belt winder onto a window frame made of synthetic materials.

3. Insert the required belt inlet.

This will ensure the correct functioning of the respective belt.

Belt inlet for:

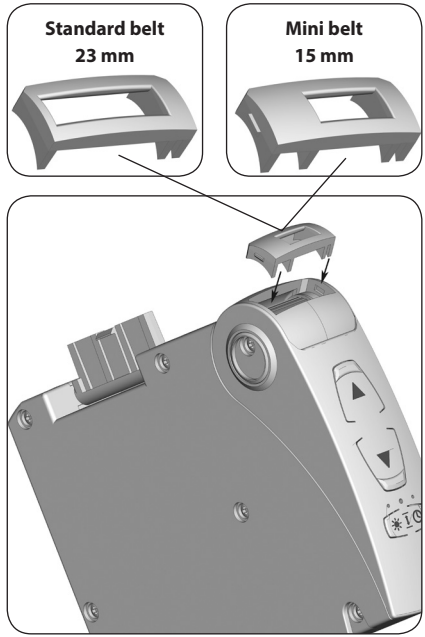

4. Use the provided mounting holes.

Two mounting holes are required to fasten the belt winder.
Generally, it is possible to make use of the existing installation holes to screw the wall bracket in place. If not, draw on the required mounting holes.

5. Mounting holes (if required).

Subsequently drill the mounting holes with a 6 mm masonry drilling machine and place the provided mounting wall plugs into the drilled holes.

6. Screw the wall bracket tightly.

Next, screw on the wall bracket tightly with the screws provided.

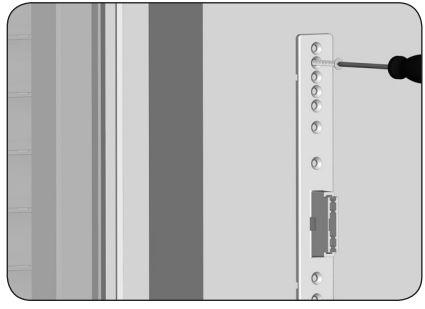

7. Push the wall bracket front panel onto the wall bracket.

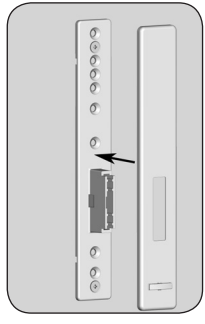

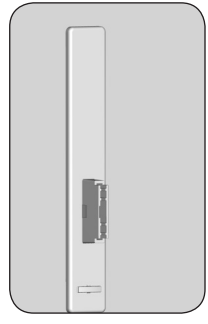

8. Connect the mains adapter and the sun sensor.

Now, connect the mains adapter and, if desired, the sun sensor on the back of the belt winder.

CAUTION

Connecting the plugs in the wrong way may destroy the belt winder.

- Plug both plugs true to side into the opening. Observe the connection symbols on the type plate.
- Never insert the plugs onto the PCB with force.

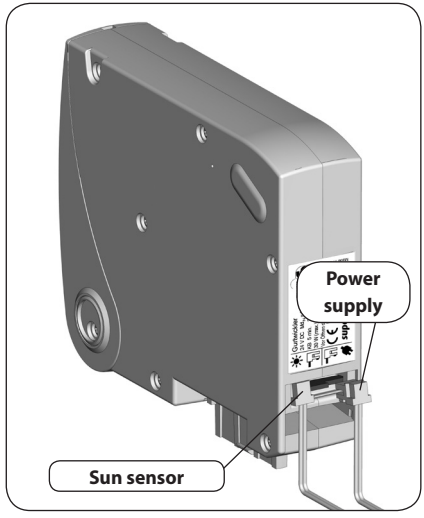

9. Next, press the belt into the wall bracket.

IMPORTANT
Lead the connecting cables behind the cable bracket.

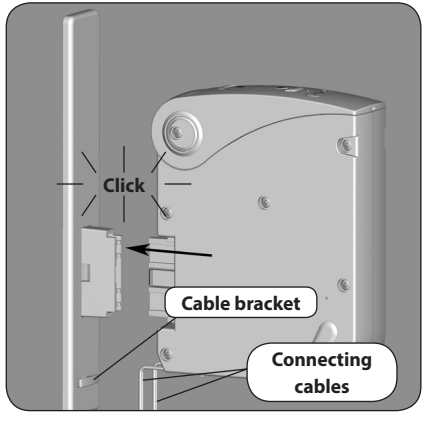

10. Press the provided screw caps onto the housing screws.

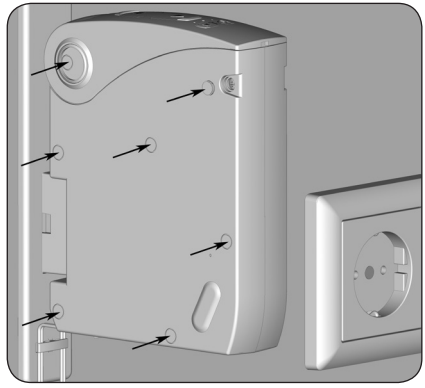

11. Open the operating panel.

The operating panel can be opened by pressing lightly and levering open with a flat screwdriver.

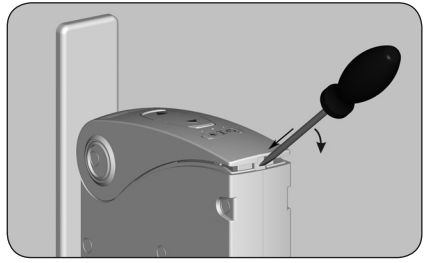

12. Draw-in the belt into the belt winder from the top.

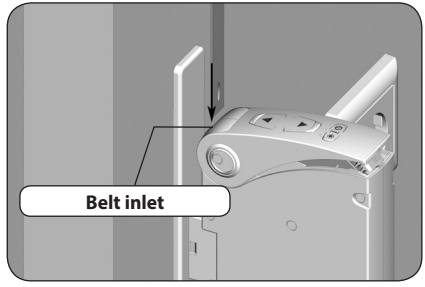

13. Pull the belt over the fastening hook.

Continue to feed the belt into the device as shown in the bottom sectional diagram and subsequently slide the belt over the fastening hook from above.

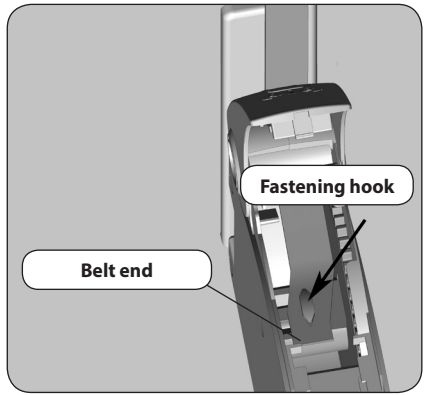

14. Belt path when surface-mounted.

This sectional diagram shows the belt path within the belt winder.

NOTE
If the fastening hook is not accessible, plug the mains adapter into the mains socket and drive the hook into the right position with the control buttons. **Subsequently pull the mains adapter out of the socket again.**

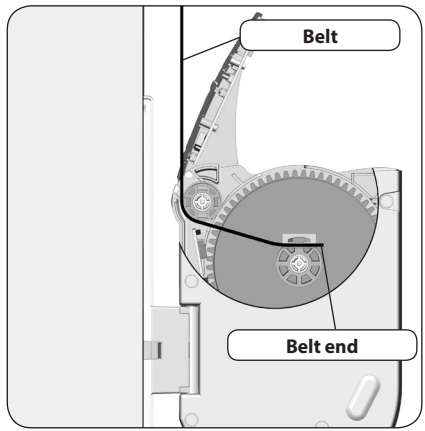

15. Optionally, mount the belt adapter.

Only required with mini belt (15 mm width), otherwise continue with point 16. For an optimum belt guide to be achieved for mini belts, the provided belt adapter must be pushed into the reel compartment after feeding in the belt.

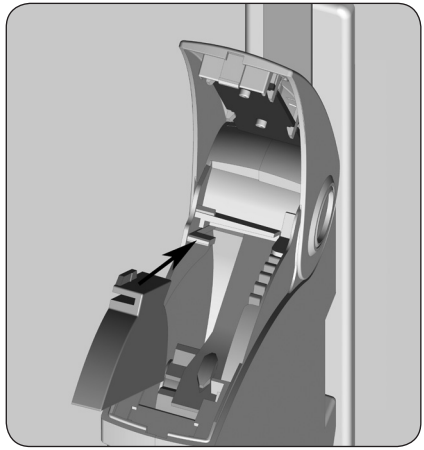

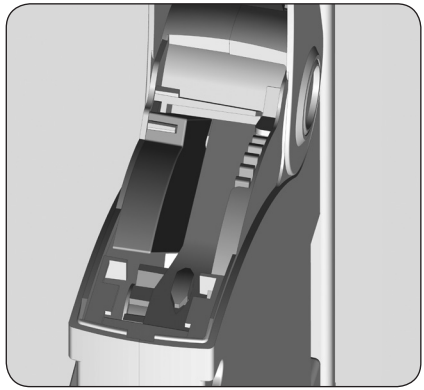

16. Mounting the sun sensor.

Secure the sun sensor to the window pane using the suction cup. The position of the sun sensor on the window pane determines the point at which the roller shutters will close to in the event of sunlight.

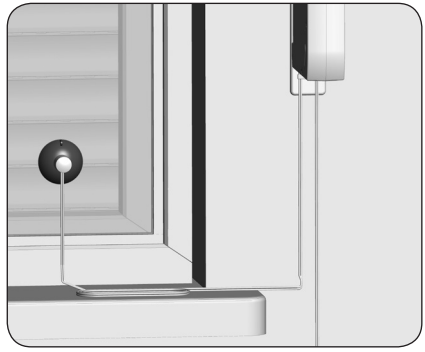

17. Commissioning

Plug in the mains adapter into the 230 V / 50Hz mains socket. This completes the installation process.

IMPORTANT
The mains socket and mains adapter must be easily accessible at all times.

9. Check the rotational direction

NOTE
A different rotational direction has to be selected depending on the type of mounting (flush or surface). The rotational direction is set ex factory for flush mounting and must be corrected in the event of surface mounting.

Please check the rotational direction prior to all other configurations as follows:

press briefly, the belt should flow into the belt winder.

press briefly, the belt should flow out of the belt winder.

If the rotational direction is correct, continue with chapter 10.

Correcting the direction of rotation

1. **Press the SET button for 10 seconds using a sharp object (e.g. a paper clip).**

2. **Pay attention to the indicator lights**
   - The timer LED flashes = surface mounting
   - By pressing again, the direction of the rotation will change again.
   - The solar LED flashes = flush mounting

Please note that the SET button is above the arrow symbol.

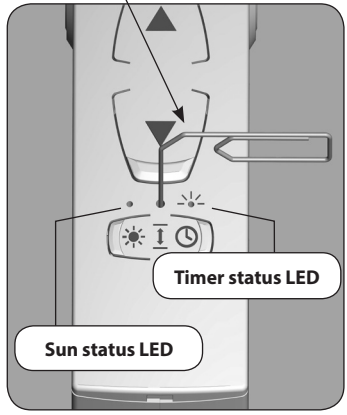

IMPORTANT
The end points must be configured in order for the roller shutters to stop at the desired upper and lower positions. It is imperative that both end points are configured, otherwise malfunctions may occur.

If the belt winder is operated without an end point setting, the drive will continue to run for as long as one of the two control buttons is actuated.

Set the upper end point

1. Simultaneously press and hold the buttons.

Press the SET button using a sharp object (e.g. a paper clip).

The roller shutter travels upwards and the timer LED flashes red.

NOTE
Tighten the belt slightly, until it is tensioned by the weight of the roller shutters.

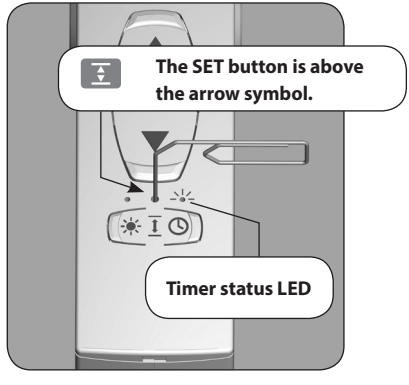

2. Release the buttons...,
...as soon as the roller shutter reaches the desired position for the upper end point. The roller shutter stops and the upper end point is stored.

IMPORTANT
see next page

Setting the wrong upper end point may lead to overload or damage the superrollo GW60 or the drive.

- Do not set the upper end point right up to the limit stop.
- Release the button promptly and never allow it to extend beyond the respective end point.

Set the lower end point

3. Simultaneously press and hold the buttons.

The roller shutter travels down.

4. Release the buttons...,

...as soon as the roller shutter reaches the desired position for the lower end point. The roller shutter stops and the lower end point is stored.

IMPORTANT
Please ensure that the belt is not excessively slack when reaching the lower end point.

10. Setting the end points

Changing or correcting the end points

5. Move the roller shutters to the centre position and configure the respective end point again.

▲ or ▼

NOTE
After a period of time it may be necessary to reconfigure the end points as the belt may elongate during the process of operation.

11. Manual operation

Manual operation is possible in any of the modes and has priority over the programmed automatic functions.

NOTE

- The end point settings will be kept with manual operation.
- You can operate the belt winder for max. 5 minutes at maximum load. Subsequently allow the drive to cool for approx. 30 minutes.

11. Manual operation

1. **Open the roller shutters.**

   Briefly pressing the button causes the roller shutters to move to the upper end point.

2. **Stop the roller shutters in the interim.**

   Briefly press any random button.

3. **Close the roller shutters.**

   Briefly pressing the button causes the roller shutters to move to the lower end point.

12. Automatic mode; configuring the opening and closing times

The same switching times every day of the week.

You can set an opening and closing time for your belt winder which will apply to all days of the week. Once this time is reached, the roller shutters will open or close automatically.

Changing the switching times

You can change the switching time settings at any time. Please note that each new setting deletes the previous setting.

NOTE

- In order to set the switching times, you must carry out this step once at the time that the roller shutters are to open or close. For example, carry out the step at 8:00 o' clock in the morning if you want the roller shutters to open at 8:00 AM every day.
- You must set at least one switching time, in order that automatic mode is activated.
- Your changes will not be executed until the next day when you configure opening and / or closing times.

Configure an opening time (▲) (e.g. at 8:00 AM)

1. **Simultaneously briefly press the buttons.**

2. **The timer LED flashes ...**

   ...the roller shutters travel upwards. The automatic mode is now switched on. Your roller shutters will open automatically every day at 8:00 AM.

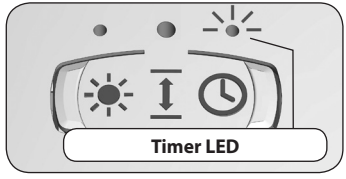

Configure a closing time (▼) (e.g. at 8:30 PM)

1. **Simultaneously briefly press the buttons.**

2. **The timer LED flashes ...**

   ...the roller shutters travel downwards. The automatic mode is now switched on. Your roller shutters will close automatically every day at 20:30.

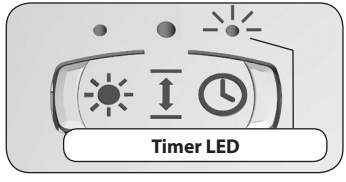

13. Automatic mode; Auto / Manual switchover

You can toggle between automatic and manual modes at any time if required.

NOTE
Manual operation of the roller shutters is possible at any time, regardless of the automatic settings.

1. Press the clock button for approx. 1 second.

2. Pay attention to the timer LED.

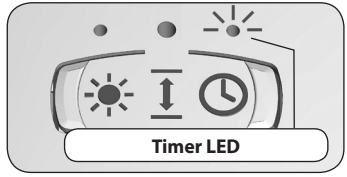

OFF

Automatic mode OFF

The previously configured switching times are stored.

ON

Automatic mode ON

Flashing

After previous power failure, if at least one switching time has previously been configured.

NOTE
In the event of power failure, the switching times will be extended by the duration of the power failure, and therefore may require reconfiguration.

The automatic solar function enables brightness-dependent control of the roller shutters in combination with the sun sensor. To do this, the sun sensor is secured to the window pane with a suction cup and connected to the belt winder by means of a plug, see page 18 and page 27.

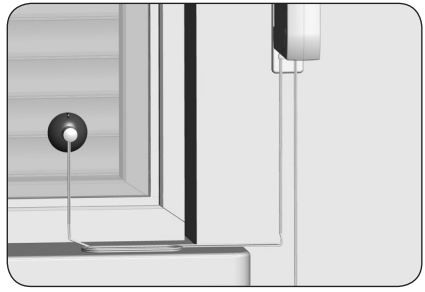

Example of surface mounting

Automatic solar function

Automatic lowering

If the sensor detects uninterrupted sunlight for 10 minutes, the shutter will descend until its shadow covers the sun sensor.

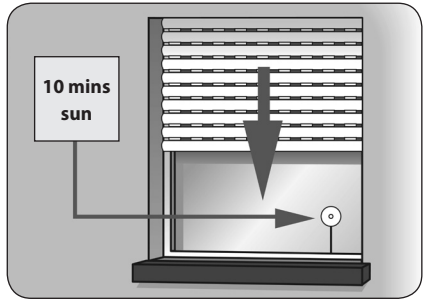

14. Automatic solar function

Automatic clearing

After approx. 20 minutes, the roller shutter is automatically raised a small amount to uncover the sensor. If the sun continues to shine, then the roller shutter remains in this position. If the brightness decreases below the set limit, it returns to the upper end point.

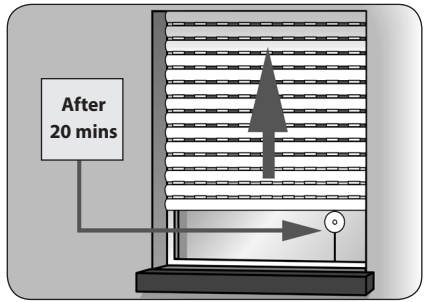

NOTE
The delay times of 10 and 20 minutes may be exceeded in the event of changing weather conditions.

14.1 Switch the automatic solar function on/off

1. **By repeatedly, briefly pressing, the automatic solar function will be switched on or off.**
2. **Pay attention to the solar LED.**

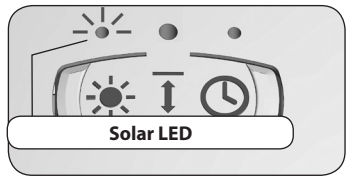

OFF
Automatic solar function OFF

ON
Automatic solar function ON

Flashing
If the set limit value is exceeded, the solar LED will flash. The automatic solar function is active.

14.2 Automatic solar function; set limit

The automatic solar function is switched on by setting or changing the set limit.

Set the current brightness as set limit and switch on the automatic solar function.

1. **Simultaneously press the buttons.**

2. **The current brightness is now the set limit.**

   If this value is exceeded, the roller shutters will roll down to the sun sensor.

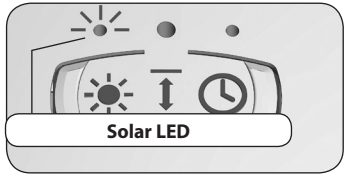

NOTE
If the current brightness value lies outside the measuring range when carrying out the configuration, the solar LED flashes briefly and the limit value is automatically adjusted to the measuring range limit.

15. Erase settings

If necessary, you can erase all of your settings and return the original factory settings.

1. Simultaneously press and hold the buttons for 4 seconds.

2. Release the buttons...,

... subsequently all of the settings will be deleted.

- End points
- Timer periods
- Automatic solar function

3. Both LEDs flash by way of confirmation.

NOTE
The rotational direction remains the same.

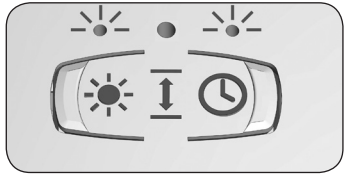

1. **Erase all settings.**

▲ + ▼ + 🕓

2. **Fully close the roller shutters. Press and hold the button.**

▼

3. **In doing so, pull out the belt as far as possible from the top of the belt winder.**

⚠ **There is a risk of injury from the reel.**

- Never reach into the reel compartment when the motor is running. Always remove the mains plug before touching the reel compartment.

4. **Remove the power supply from the mains socket, open the operating panel and release the belt from the fastening hook.**

   Pull it out fully and then dismantle the belt winder.

5. **Finally, loosen the two connectors on the rear of the device with a small screwdriver and dismantle the sun sensor.**

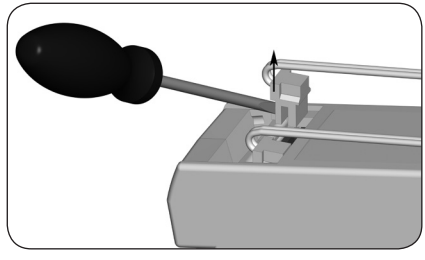

In the event that the belt winder unit fails and the motor no longer runs, you can use the disengaging bracket provided in order to fully remove the belt from the belt winder unit, without the need for cutting it. For this, you must first dismantle the flush-mounted belt winder.

1. **Remove the mains adapter from the socket.**

2. **Release the drive using a sharp object (e.g. a paper clip).**

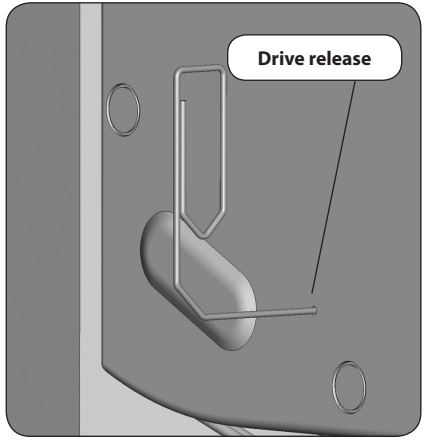

ATTENTION
Hold on to the belt tightly, as otherwise the roller shutters may slam shut.

A small amount of resistance must be overcome when pressing.

3. **Maintain pressure on the disengaging bracket and pull the belt out of the belt winder as far as possible.**

   Release the belt from the fastening hook and pull it out completely from the belt winder.

1. **Erase all settings.**

2. **Fully close the roller shutters. Press and hold the button.**

3. **In doing so, pull out the belt as far as possible from the top of the belt winder.**

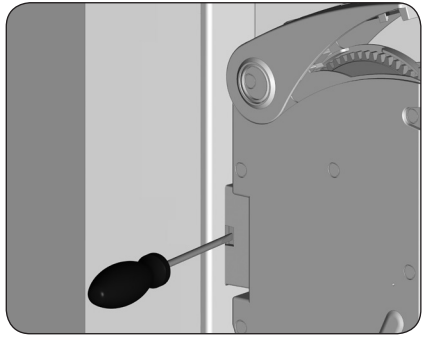

There is a risk of injury from the reel.

- Never reach into the reel compartment when the motor is running. Always remove the mains plug before touching the reel compartment.

4. **Remove the power supply from the mains socket, open the operating panel and release the belt from the fastening hook.**
   Pull it out completely.

5. **Subsequently unscrew the belt winder from the wall bracket.**

6. **Finally, loosen the two connectors on the rear of the device with a small screwdriver and dismantle the sun sensor.**

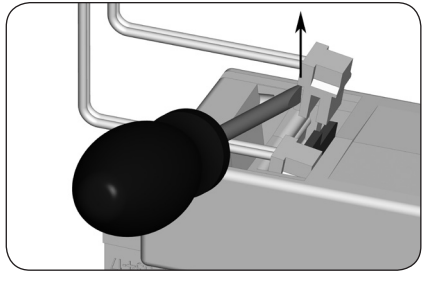

In the event that the belt winder unit fails and the motor no longer runs, you can use the disengaging bracket provided in order to fully remove the belt from the belt winder unit, without the need for cutting it. For this, you must first dismantle the surface-mounted belt winder.

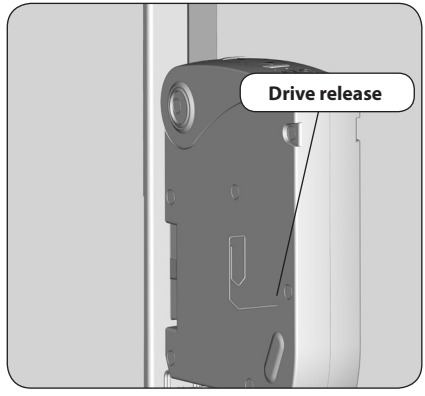

1. **Remove the mains adapter from the socket.**
2. **Release the drive using a sharp object (e.g. a paper clip).**

ATTENTION
Hold on to the belt tightly, as otherwise the roller shutters may slam shut.

A small amount of resistance must be overcome when pressing.

3. **Maintain pressure on the disengaging bracket and pull the belt out of the belt winder as far as possible.**

Release the belt from the fastening hook and pull it out completely from the belt winder.

4. **Finally, dismantle the surface-mounted belt winder as previously demonstrated on page 45.**

Fault	Cause / solution
... the belt winder indicates no functions?	Check the power supply incl. connecting cable and plug.
... the belt winder fails to react at the configured switching time?	There may have been a power failure. Reconfigure the switching times, see page 36.
... the timer LED flashes?	There may have been a power failure. Reconfigure the switching times, see page 36.
... the roller shutter does not travel up all the way?	The end points may be displaced due to elongation of the belt. Re-adjust the end points, see page 33.
... the roller shutters stop as soon as the control button is released?	The end points are not configured. Configure the end points, see page 33.
... the automatic solar function does not work?	a) Check whether the sun sensor is attached to the window pane.
	b) Is the sunlight not bright enough or is the sensor excessively darkened as a result of shading?
	c) Check the solar LED, this should be lit up, see page 40.
	d) Check the sun sensor connecting cable for damage.
	e) Is the plug properly connected to the device?

Fault	Cause / solution
... the roller shutters stop during downward travel?	a) The roller shutters may have hit an obstacle.
	Move the roller shutters back up and remove the obstacle.
	b) The roller shutters are too light.
	Increase the weight of the roller shutters by, for example, adding a piece of flat steel to the bottom slat.
... the roller shutters stop suddenly during upward travel?	a) The drive is jammed, for example, due to the roller shutters freezing up or other obstacles.
	b) The roller shutters may not be running sufficiently smoothly. Check the roller shutters and roller shutter guides.
	c) The roller shutters may be too heavy. The maximum tractive force of the belt winder has been exceeded, see page 50.
... the belt winder fails to operate in any direction (up or down)?	The maximum running time of the drive has been exceeded, see page 35 and page 50. The motor is too hot.
	The belt winder will be operational again in approx. 30 minutes.

Maintenance

A lack of maintenance can lead to personal injury through damage to your superrollo GW60 and the roller shutter system.

- Please check the superrollo GW60 and all of your roller shutter components regularly for damage.
  - Regularly check the superrollo GW60 for correct functioning.
  - The blinds must not be damaged.
  - The belt may not be frayed.
  - The deflection roller on the roller shutter box must move freely.
  - The reel plate in the roller shutter box must be fastened and stable. It may become less stable when used over a longer period of time.
- Damaged components should be exchanged by a specialist roller shutter firm.

Maintenance

You can clean the superrollo GW60 using a damp cloth. Please do not use aggressive or abrasive cleaning agents.

22. Technical Specifications

Power supply operating voltage:	230 V / 50 Hz
Standby power:	0.7 W
Nominal power:	24 V DC / 30 W max. 45 W
Torque:	MdN = 2.8 Nm
Max. speed:	34 rpm
End tractive force:	7 kg
Max. tractive force / starting tractive force:	25 kg
Transient operation:	5 minutes
Protection class:	III
Protection type:	IP20 (only for use in dry rooms)
Positioning accuracy:	5 mm
Number of switching times:	2 (UP and DOWN)
Automatic solar function setting range:	2,000 to 20,000 Lux
Ambient temperature:	0 - 40 °C
Sound pressure level (LpA):	≤ 70 dB(A)
Dimensions:	see page 51 / 52
Permissible belt widths:	15 mm (Mini belt) 23 mm (belt)
Belt lengths:	
15 mm (Minibelt)	5.5 m at 1.0 mm belt thickness
23 mm (Standard belt)	5.5 m at 1.0 mm belt thickness 4.5 m at 1.3 mm belt thickness

22.1 Dimensions flush-mounted device

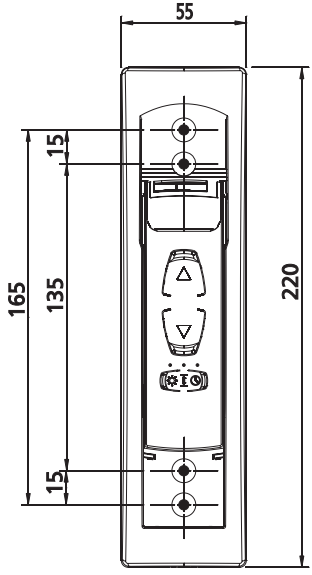

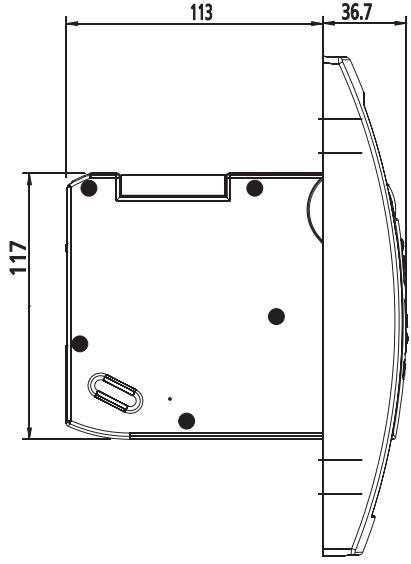

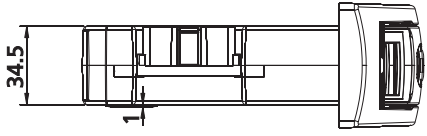

All dimensions in mm.

22.2 Dimensions surface-mounted device

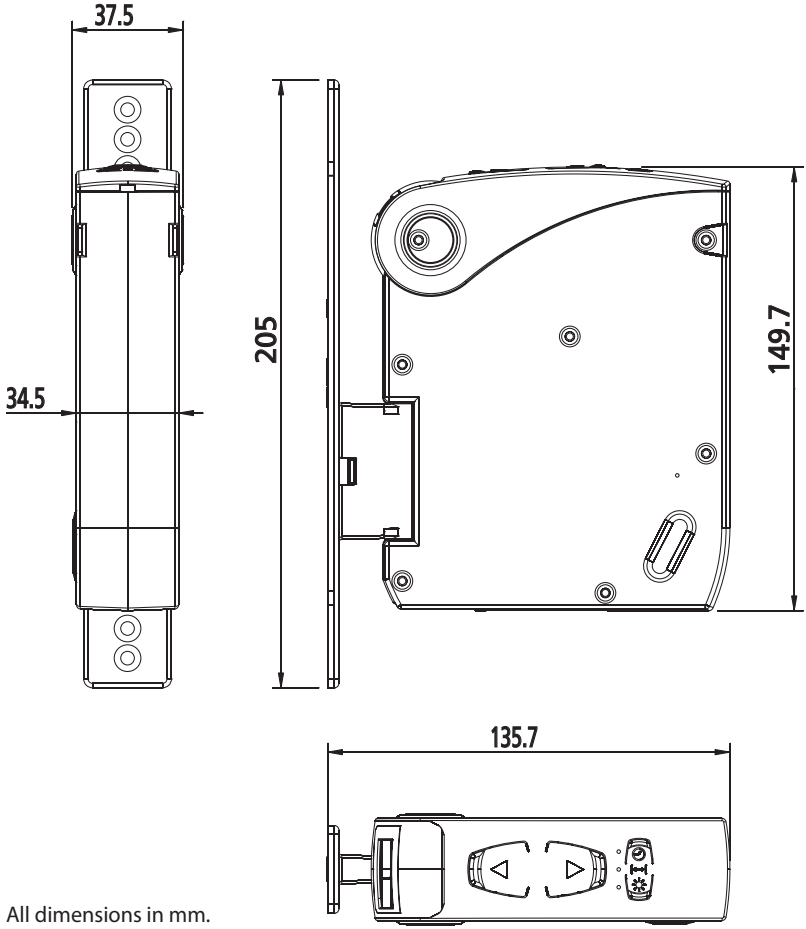

All dimensions in mm.

23. CE Mark and EC Declaration of Conformity

The electronic roller shutter belt winder **superrollo GW60** (item no. SR10060 / SR10065) complies with the requirements of the current European and national directives:

2006/42/EC	**Machinery Directive**
2014/30/EU	**EMC Directive**

Conformity has been verified. The corresponding declarations and documentation are available on file at the manufacturer's premises.

superrollo Hausautomatisierung GmbH
Gewerbepark 1
01156 Dresden (Germany)

24. Warranty conditions

superrollo Hausautomatisierung GmbH provides a 24-month warranty for new systems that have been installed in compliance with the installation instructions. All construction faults, material defects and manufacturing defects shall be covered by the warranty.

Your statutory warranty claims shall remain unaffected by this warranty.

The following shall not be covered by the warranty:

- Incorrect fitting or installation
- Non-observance of the installation and operating instructions
- Improper operation or wear and tear
- External influences, such as impacts, knocks or weathering
- Repairs and modifications by third parties, unauthorised persons
- Use of unsuitable accessories
- Damage caused by unacceptable excess voltage (e.g. lightning)
- Operational malfunctions caused by radio frequency overlapping and other such radio interference

A prerequisite for the warrant is that the new device must have been purchased from one of our approved specialist retailers. Proof of this must be provided by presenting a copy of the bill.

superrollo Hausautomatisierung GmbH will remedy any defects which occur within the warranty period free of charge either by repair or by replacement of the affected parts or by supply of a new replacement unit or one of the same value. There is no general extension of the original warranty period by delivery of a replacement or by repair as per the terms of the warranty.

superrollo Hausautomatisierung GmbH
Gewerbepark 1
01156 Dresden (Germany)
www.superrollo-online.de
Service Hotline: 01807 001-655 *

* 30 seconds free of charge, subsequently 14 cents / minute from German fixed line networks and max. 42 cents / minute from German mobile networks.